PARTS LIST			
ITEM	QTY	PART NUMBER	DESCRIPTION
1	2	10151	Front Height Bar Harrow
2	2	90902	Long Harrow Arm
3	4	90000	Lynch Pin
4	6	90136	1/2" x 1-1/2" Bolt
5	6	90138	1/2" nut
6	5	90134	1/2" Lock Washer
7	6	90131	1/2" Flat Washer
8	48	.3125 Chain Link	5/16" Chain Link
9	40	.187 Chain Link	3/16" Chain Link
10	6	90118	3/8" Nut
11	6	90120	3/8" x 1" Bolt
12	6	90121	3/8" Lock Washer
13	6	90224	3/8" Flat Washer
14	2	90139	U-bolt 3/4" x 7 1/8" x 9
15	4	90158	.75 lock washer
16	4	90160	3/4" nut
17	1	Harrow 9' - 5 bar assembly	

PARTS LIST			
ITEM	QTY	PART NUMBER	DESCRIPTION
18	4	90917	Harrow Puller Assy
19	10	90810C	Tube Clamp Casting
20	20	90975	Connecting Link Spacer
21	8	90915	Connecting link
22	60	10250	Spiked Tooth
23	88	90192	Lock Nut
24	8	90641	1/2 x 2 3/4 Bolt
25	20	90193	1/2 x 3 Bolt
26	1	90943	9' Harrow Bar #1
27	1	90944	9' Harrow Bar #2
28	1	90945	9' Harrow Bar #3
29	1	90946	9' Harrow Bar #4
30	1	90947	9' Harrow Bar #5

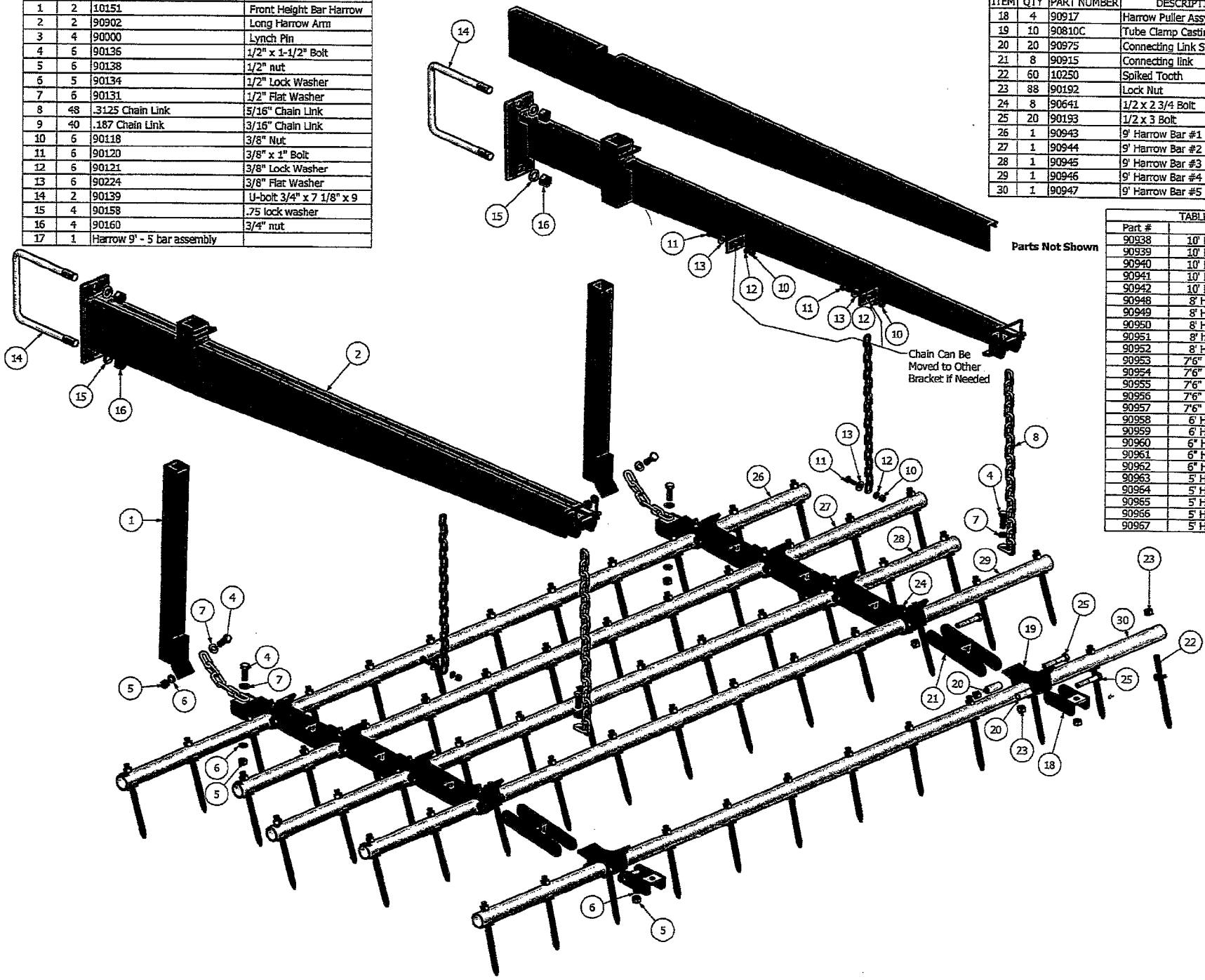

Parts Not Shown

TABLE	
Part #	Descr.
90938	10' Harrow Bar 1
90939	10' Harrow Bar 2
90940	10' Harrow Bar 3
90941	10' Harrow Bar 4
90942	10' Harrow Bar 5
90948	8' Harrow Bar 1
90949	8' Harrow Bar 2
90950	8' Harrow Bar 3
90951	8' harrow Bar 4
90952	8' Harrow Bar 5
90953	7'6" Harrow Bar 1
90954	7'6" Harrow Bar 2
90955	7'6" Harrow Bar 3
90956	7'6" Harrow Bar 4
90957	7'6" Harrow Bar 5
90958	6' Harrow Bar 1
90959	6' Harrow Bar 2
90960	6" Harrow Bar 3
90961	6" Harrow Bar 4
90962	6" Harrow Bar 5
90963	5' Harrow Bar 1
90964	5' Harrow Bar 2
90965	5' Harrow Bar 3
90966	5' Harrow Bar 4
90967	5' Harrow Bar 5